The linked image cannot be displayed. The file may have been moved, renamed, or deleted. Verify that the link points to the correct file and location.

Royce Instruments®

System 650 Quick Start Guide

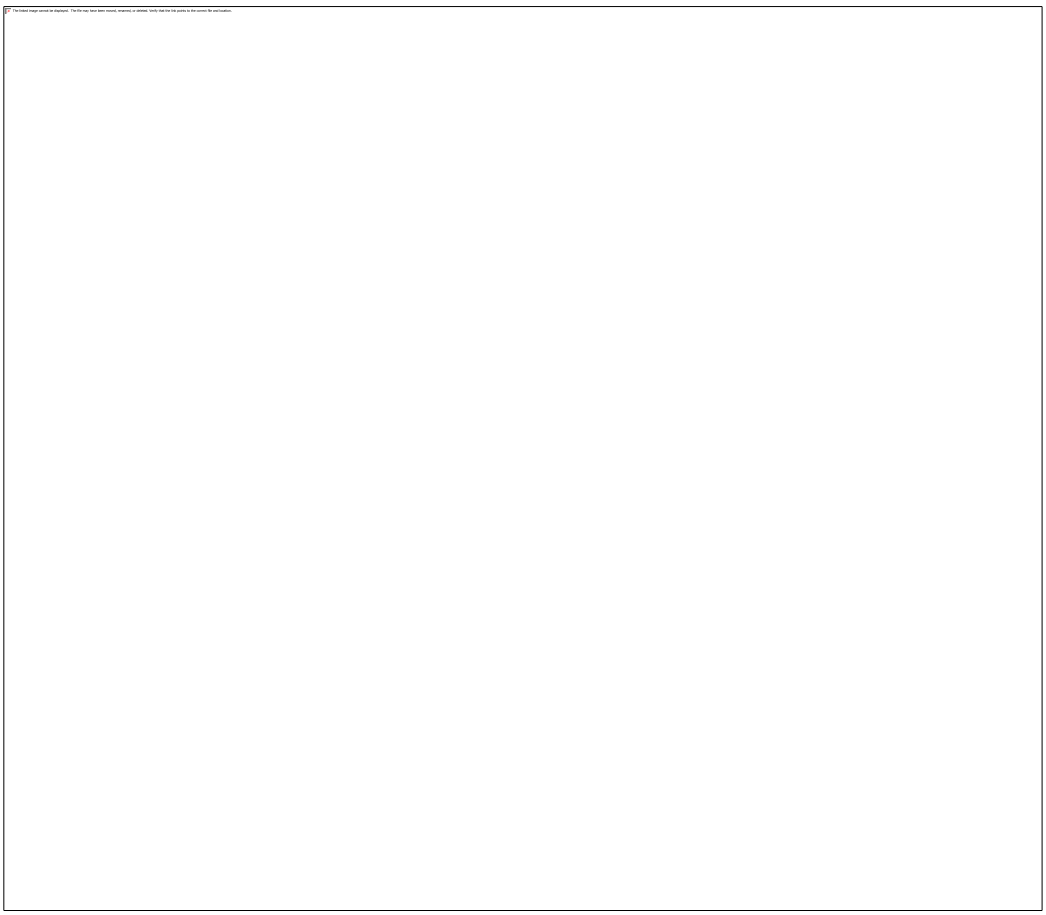

System 650 Quick Start Guide

Uncrating and Installation Instructions

Document 23408 Rev 4

Royce Instruments, LLC.

831 Latour Court Suite C

Napa, California 94558

United States of America

(707) 255-9078

www.royceinstruments.com

Safety Precautions

- Read and follow the instructions! All the safety and operating instructions must be read before the machine is operated.
- Use only the correct power source as marked on the machine - if you are not sure of the power supply consult you local power company. If the machine uses a wall plug-in transformer, use only the transformer supplied.
- Your wall outlet must accept a polarized, three-prong grounded plug. These plugs are designed for your safety, so do not attempt to defeat them. If you cannot insert the plug easily, an electrician should replace the outlet.
- Operators must be trained on the proper use of the machine and on handling shear tools and pull hooks before performing any tests.
- Do not use liquids where they can be spilled into the enclosure through openings.
- Do not use machine if you suspect a gas leak. Report the leak immediately.
- Do not use the machine near water, or when you are wet. If the machine comes in contact with any liquids, unplug the power and line cords immediately.
  Do not plug the machine back in until it has been dried thoroughly.
- The machine must be serviced by qualified service personnel when:
  - The power supply cord or the plug has been damaged
  - Objects have fallen or liquid has been spilled into the machine
  - The machine has been exposed to rain
  - The machine does not appear to operate normally or exhibits a marked change in the performance
  - The machine has been dropped, or the enclosure is damaged
- Do not attempt to service the machine beyond the operating instructions.
  All other servicing should be referred to qualified service personnel.
  Opening the machine or reassembling it incorrectly may expose you to dangerous voltages or other risks.
- The Royce 650 system mainframe weighs 55 kg (125 lb.).
  Two people are needed to move or lift the system mainframe safely.

Get Help from Royce Instruments

Before you contact us, please record the following information.

System serial number : *(located on the back of the machine)*

_____

Installed software revision number : *(under Help>About)*

_____

Module serial numbers : *(located on the test module right hand side)*

_____

_____

_____

_____

Support Options

Internet – www.royceinstruments.com

Check us out online for answers to frequently asked questions and product information.

Email – customerservice@royceinstruments.com

For individual attention on a special issue, contact our knowledgeable technical support representatives.

Process Consumables

Many of the more common consumable items are can be purchased directly from our website.

http://www.royceinstruments.com/consumables.html

Extended Warranty

Royce Instruments Extended Warranty is a cost-effective service and support program. For more information, visit the Royce Instruments website.

Disclaimer

Royce Instruments, LLC. has reviewed this guide thoroughly. All statements, technical information, and recommendations in this manual are believed reliable, but the accuracy and completeness thereof are not guaranteed or warranted, and they are not intended to be, nor should they be understood to be, representation or warranties concerning the products described. Getting Help From Royce Instruments

Copyright

This guide is copyrighted by Royce Instruments, LLC. with all rights reserved. Under U.S. copyright laws, this manual may not be reproduced in any form, in whole or in part, without the prior consent of Royce Instruments, LLC.

©2011 Royce Instruments, LLC.

Disclaimer

Royce Instruments, LLC. has reviewed this guide thoroughly. All statements, technical information, and recommendations in this manual are believed reliable, but the accuracy and completeness thereof are not guaranteed or warranted, and they are not intended to be, nor should they be understood to be, representation or warranties concerning the products described.

Trademarks

Royce Instruments is a registered trademark of Royce Instruments, LLC.

Microsoft and Windows are registered trademarks of Microsoft Corporation. All other trademarks mentioned in this guide are trademarks of their respective owners.

The information in this document is subject to change in order to improve reliability, design, or function without prior notice and does not represent a commitment on the part of this company.

Table of Contents

Safety Precautions iii
Get Help from Royce Instruments iv
Support Options 5
Uncrating the Royce 650 System 8
Royce 650 Facility and Location Requirements 10
Utility and Environmental Requirements 11
Installing the Royce 650 System 12
Initial Startup Procedure 17

Uncrating the Royce 650 System

The Royce 650 mainframe is shipped in a wooden crate, accessories are packed in separate cardboard boxes.

Tools required: Claw hammer, standard flat-blade screwdriver, adjustable wrench

- Use the screwdriver and claw hammer to remove the wire clamps that secure the top of the wooden crate to the base.

CAUTION: Remove clamps carefully, they can spring off as you pry them away from the crate.

- Lift the top of the crate straight up from the wooden base to clear the machine inside. Set the crate top aside.

- Carefully remove all protective plastic wrapping from the machine.

- The Royce 650 is securely mounted to the base of the crate. Using a wrench, loosen and remove the five (5) 9/16-inch lag bolts and hold-down clamps around the side of the machine.

- Remove the two wooden side blocks from the base, being careful not to mar the finish on the Royce 650. Removing the blocks makes it easier to lift the machine from the wooden base.

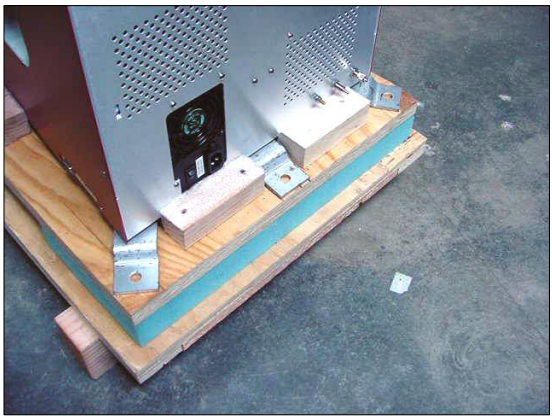

- With two persons, carefully lift the Royce 650 off the shipping base and place it on a level, stable surface. The Royce 650 weighs 125 lbs. (55 kg).

WARNING: DO NOT lift the machine by the X-Y stage, Monitor Arm or LED light arms; damage will occur!

Separate boxes contain Royce 650 system components and accessories. As you unpack the boxes, check the items against the packing list shipped with your system to ensure all parts were received. If any items are missing, contact Royce Customer Service immediately.

- Your shipment should contain the following items:
- Royce 650 mainframe
- Microscope and lens
- Microscope debris shield
- LCD monitor mount
- LCD monitor
- Power cord
- VGA monitor cable
- Royce 650 Quick Start Guide (this guide)
- Royce 650 User Guide
- Test modules you ordered
- Test piece holders and other associated hardware depending on your order

Royce 650 Facility and Location Requirements

WARNING: If the equipment is used in a manner not specified by the manufacturer, the protection provided by the equipment may be impaired and may void any warranties.

1. The Royce 650 should be located close to power, air, and vacuum supplies to make the installation easier. Be sure to include enough space behind the machine to access the back panel fittings.

2. The machine should be situated away from heat sources such as radiators, heat registers, ovens, or other machinery that produce heat or vibration.

3. Power supply cords should be routed so that they are not likely to be walked on or pinched by items placed upon or against them. Paying particular attention to cords at plugs, convenience receptacles, and the point where they exit from the appliance.

4. The Royce 650 should be placed in area that allows adequate access for installation and maintenance to the side and back of the machine. Refer to Table 1 for the optimum operation space requirements and Figure 1 for the installation clearance measurements.

Width	76 cm (30 in) minimum
Height	63 cm (25 in) minimum, 94.2 cm (37 in) maximum
Depth	76 cm (30 in) minimum
Weight	55 kg (125 lbs)

Table 1. Installed Dimensions for the Royce 650

CAUTION: Be sure allow enough room for facility and maintenance access around the machine.

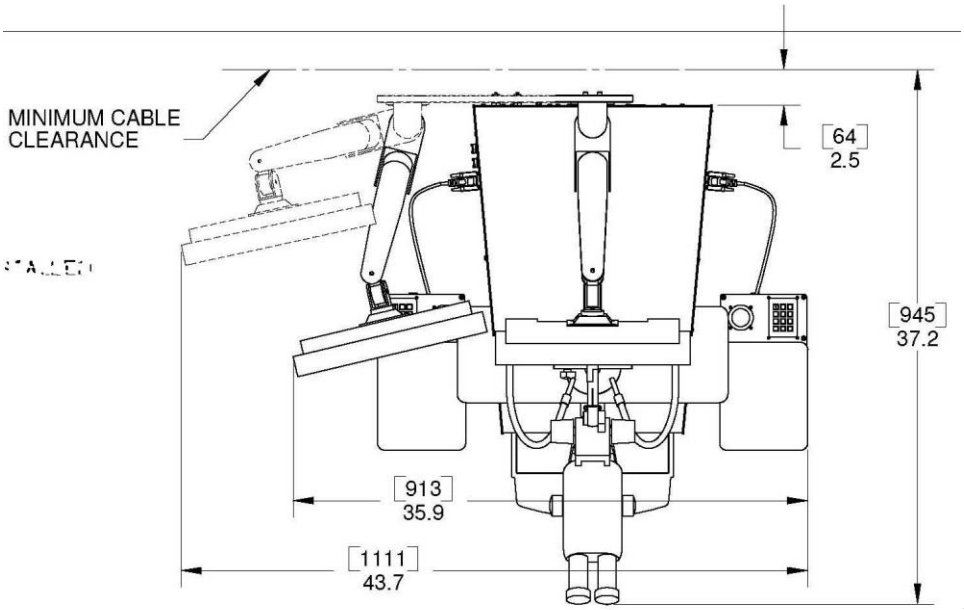

Figure 1. Royce 650 Site Installation Measurements

Utility and Environmental Requirements

The Royce 650 is designed for indoor use with the following utility and environmental requirements listed in Table 2.

Electrical	Two 110-220 VAC, 50-60H., 6 Amps @ 115V. Supply voltage not to exceed +/- 10 percent of nominal voltage
Air Pressure	60-80 PSI (420-550 Kpa) Peak flow: minimal Filtered: 10 um, oil-free preferred (some discharge to atmosphere)
Vacuum	20 in Hg (67.7 Kpa) minimum negative gauge pressure Vacuum flow minimal
Altitude	Up to 2,000 meters (6,000 feet)
Temperature Range	22 +/- 3 degrees C (72 +/- 5 degrees F)
Relative Humidity	20 to 60 percent, non-saturating
Contamination	Clean room class 10,000 or better preferred
Positioning	The system must be leveled with the bubble level shipped with the machine, with all leveling feet adjusted and secured

Table 2. Royce 650 Utility and Environmental Requirements

Installing the Royce 650 System

1. With two persons, carefully place the Royce 650 machine in the location where it is going to be used.

2. Level the machine by placing a bubble level on the X-Y stage rail in the middle of the machine.

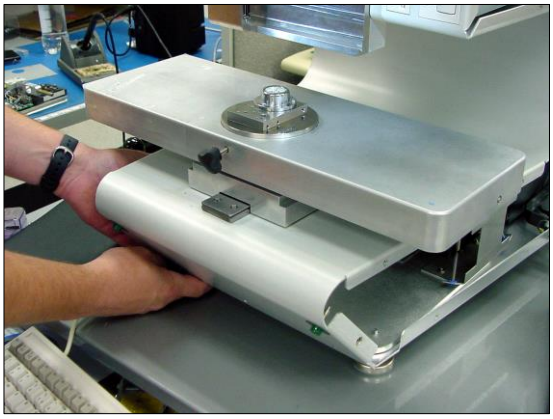

3. Adjust the 4 corner leveling feet until the bubble is centered in the target circle of the bubble level.

4. Lock the four corner feet in place using the lock nuts.

5. Thread the center back foot down until it makes contact with the table and lock it in place with the lock nut. Check to make sure the bubble is still level. Adjust the feet as needed to achieve proper level with the feet locked in place.

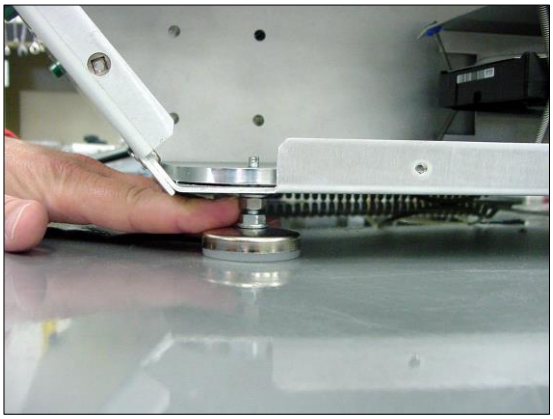

6. As shown in Figure 2, the adjustable monitor mount allows you to position the monitor on the left side, the right side, or on top of the machine. Determine the best position for the monitor for your application and then determine the orientation of the monitor arm support bracket.

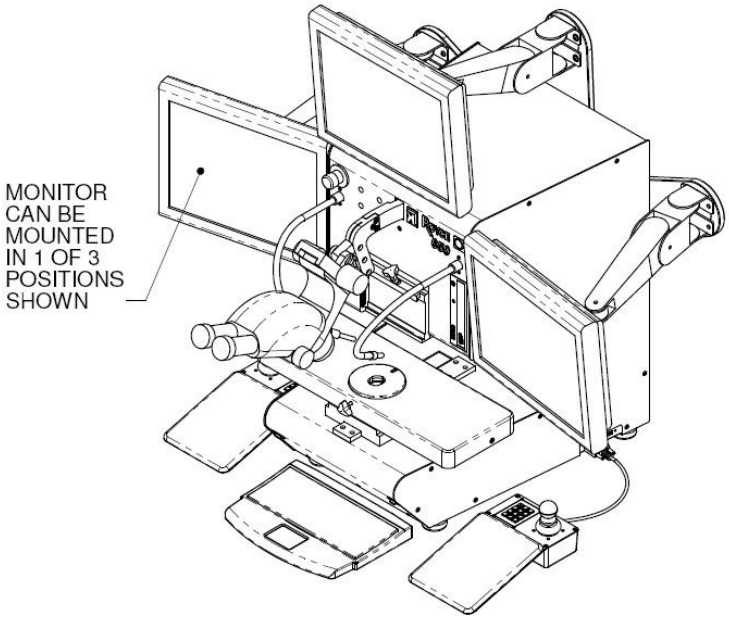

Figure 2. Royce 650 Monitor Mounting Positions

7. If necessary, reposition the monitor arm in the chosen orientation and secure the monitor arm support bracket with the four self locking nuts.

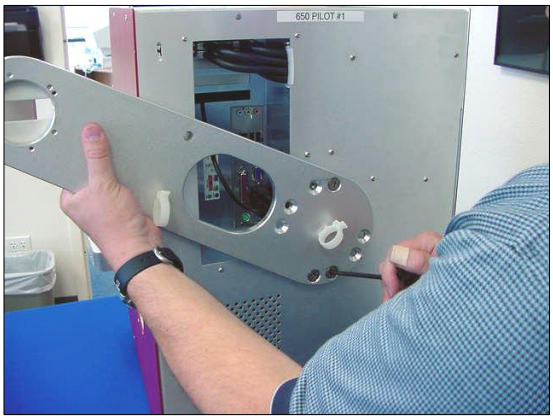

8. Position the monitor arm in the chosen orientation and secure the monitor arm support bracket with the four (4) flat head bolts. Pull to release the spring-loaded angle pin on the monitor arm and position the arm to the desired angle.

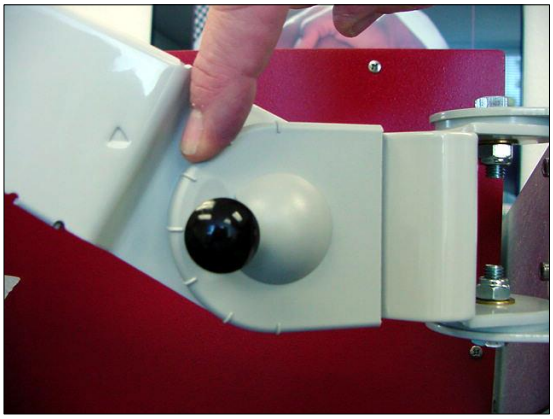

NOTE: Use the arrow and alignment lines on the arm to make sure the pin goes back into the lock position.

9. If not already accomplished, install the LCD monitor on the arm with the four (4) screws shipped with it.

10. Connect one end of the VGA cable into the back of the LCD monitor and secure. Thread the cable through the monitor arm guides and the opening in the monitor bracket.

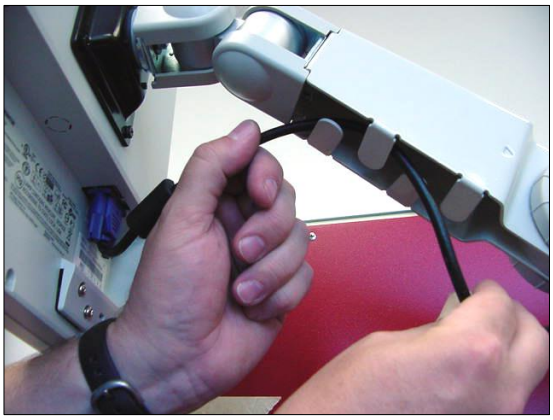

11. Plug the other end of the cable into the VGA connector on the rear panel of the machine. Secure the VGA cable with the mount arm retaining clips.

12. Connect the monitor power cable into the back of the monitor and secure. Thread the power cable through the monitor arm guides and through the opening in the monitor bracket.

13. Plug the other end of the monitor power cable into a 110-220 VAC, 50-60 Hz power source receptacle. The monitor will turn on and initialize.

14. Place the Royce 650 keyboard on a preferred location on the work surface.

15. Route the keyboard cable to the back of the machine and plug it into any open USB connector on the Royce 650 back panel.

16. Place the joysticks on either side of the machine and plug each cable into the side panel joystick D-sub 9 pin connector.

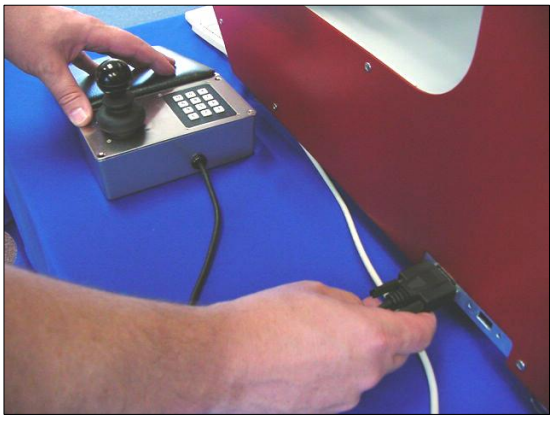

17. Using the 5mm hex Allen wrench, loosen the three (3) microscope focus arm clamp socket screws.

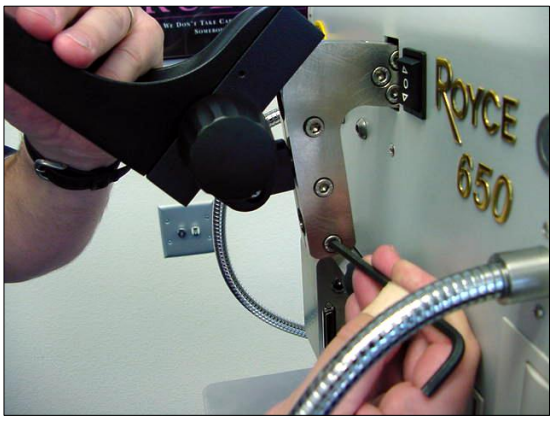

NOTE: Use Table 3 to determine the optimal position for the focus arm.

Focus Arm Hole Location	Microscope Objective Lens	Microscope Order Number
Top	0.75x	MS4-08-22984
Middle	None	MS4-10-22985, MS4-16-22986, MS4-20-22987
Bottom	1.6x	MS4-32-22988

Table 3. Focus Arm Installation Position

18. Insert the focus arm into the clamp hole and tighten the three clamping screws until snug.
    It is not necessary to fully tighten all 3 screws.

19. Install the microscope and objective lenses, and secure the microscope head with the nylon-tipped thumbscrew.

20. Install the plastic debris shield on the microscope neck and secure with a thumbscrew. The debris shield is provided to protect the users' eyes from flying debris during testing.

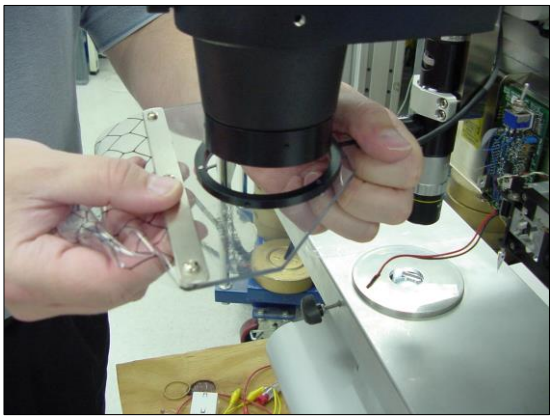

21. Adjust the microscope focus arm position to achieve optimal performance.

22. If necessary, move the test module storage racks to the side of the machine opposite the monitor.
23. Make sure the rear power switch is in the OFF position. Make sure the Emergency Off (EMO) or Stop button is pushed in. Connect the main power cable to the back panel of the machine. Connect the power cable to the 110-220 VAC, 50-60 Hz power source receptacle.

NOTE: Air requirements: 60-80 PSI (420-550 Kpa), flow rate minimal, filtered rate 10 um, oil-free preferred (some discharge to atmosphere).

In order to connect air to the machine, you will need a length of polyurethane tubing 6mm outside diameter, 4 mm inside diameter.

24. Remove the locking nut and push onto the tubing. Push the tubing onto the air connector barb until it stops. Thread the locking nut over the barb to secure, finger-tight. DO NOT over-tighten the screw. Connect the other end of the tubing to the facility air supply.

25. In a similar fashion, install the vacuum tubing repeating the actions in the previous step.

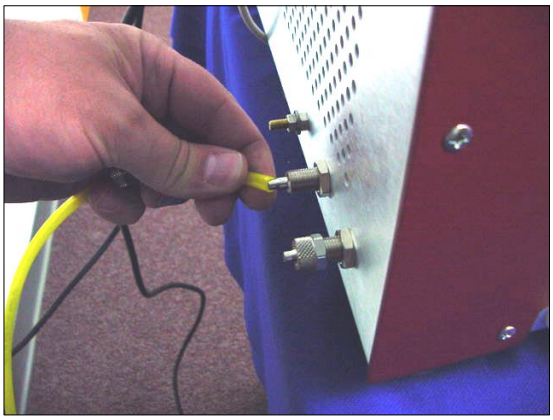

NOTE: Vacuum requirements: 20 in Hg (67.7 Kpa) minimum negative gauge pressure, flow rate minimal.

Initial Start up Procedure

CAUTION: Please remove any possible obstructions before turning the power on to the Royce 650 mainframe.

1. Make sure you have completed the installation instructions.

2. Remove the shipping lock screw from the Z axis module mount as shown in Figure 3.

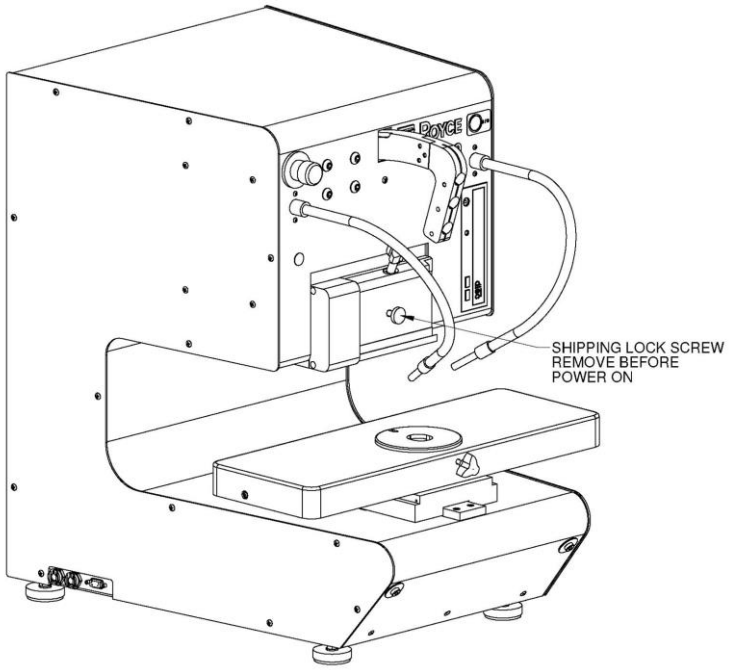

Figure 3. Shipping Lock Screw

NOTE: Refer to Figure 4 for the location of the components.

1. Turn on the main power supply (I/0) switch on the back of the machine.
2. Turn the Emergency Off/Stop switch clockwise until it pops out.
3. Press the Start button on the front panel of the machine. The green LED light will turn on. The machine will now initialize.

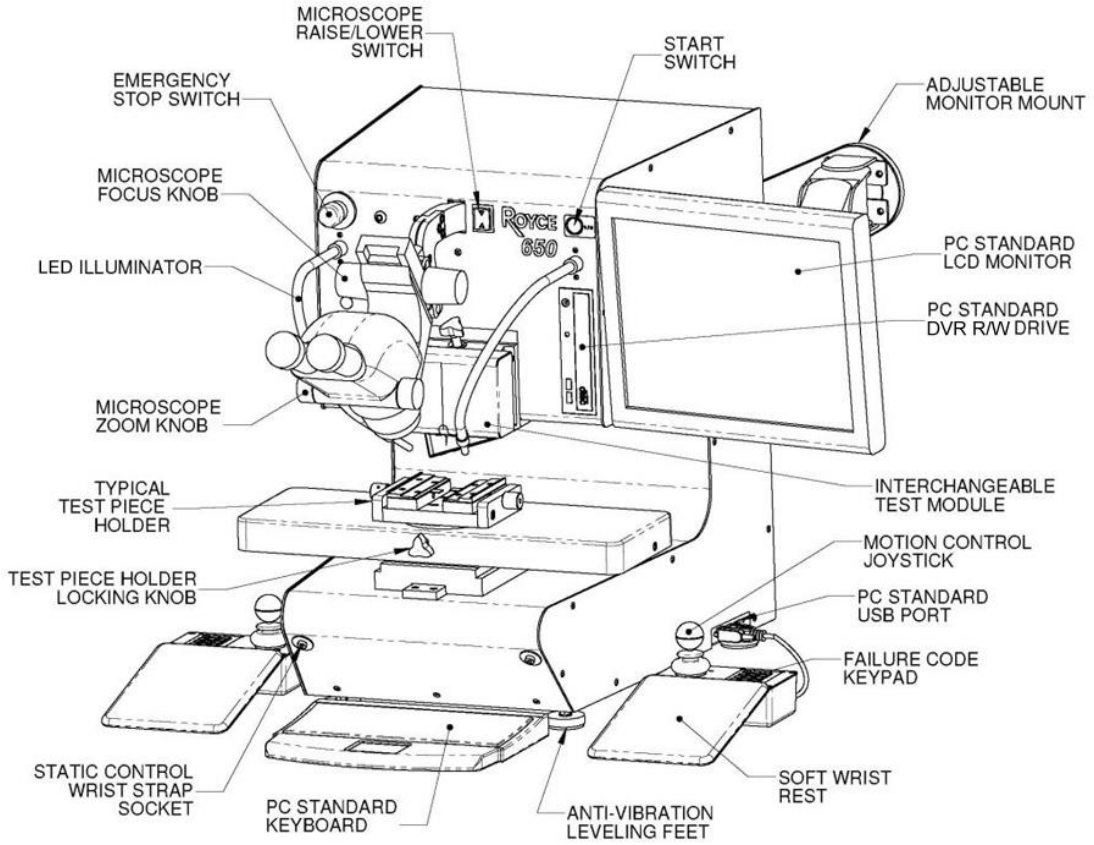

Figure 4.

Royce 650 Universal Bond Tester

4. Allow the computer to initialize until the Microsoft “Welcome Windows” splash page appears.
5. When the Windows login screen appears, simultaneously press the CTRL+ALT+DEL keyboard

keys.

6. When the Windows login appears (not shown), enter the system user name and password as follows:

   Username: ***User***
   Password: ***User***
   press Enter.

   NOTE
   Passwords are case sensitive

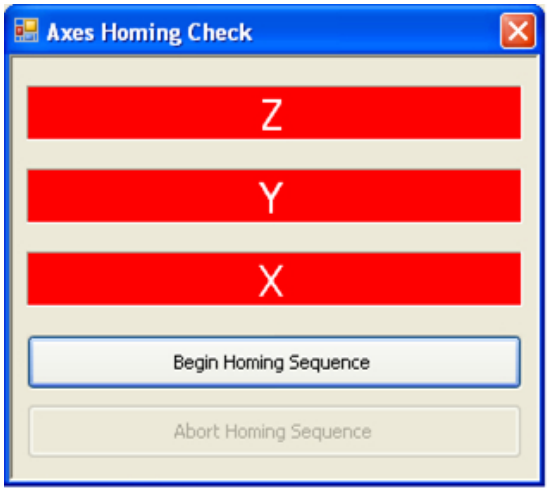

7. Double-click on the Royce 650 icon to start the Royce 650 Bond Test Manager

8. The main Royce 650 Welcome window appears. To initially log on to the Royce 650, enter:
   Username: ***Administrator***
   Password: ***admin***

   NOTE
   Passwords are case sensitive

9. The Axis Homing screen automatically appears. The X, Y and Z positions need to be set to the home

position whenever the power is first turned on.

10. Select Begin Homing Sequence.
    All axes will automatically home.

NOTE: The Axis Homing screen X, Y, Z bars will turn green when the procedure is successfully completed. The homing procedure will be complete within 10-20 seconds.

Refer to the Royce 650 User Guide for instructions on installing a test module, loading a test recipe template, and performing a wire bond test.